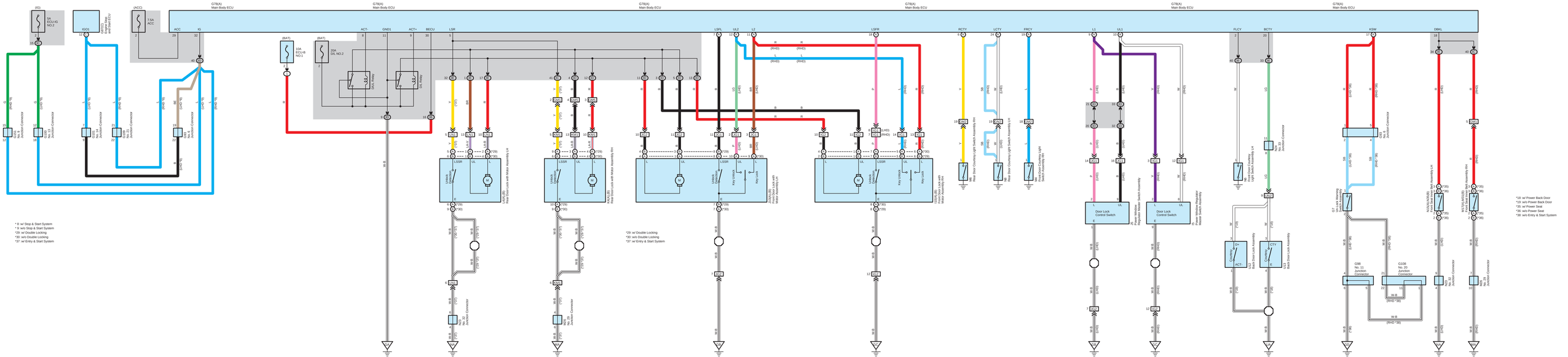
G78(A)
Main Body ECU
(IG)
5A
ECU-IG
NO.2
(ACC)
7.5A
ACC
IGO1
Signal Sec
Assistance ECU
ACC
IG
ACT-
GND1
ACT+
BECU
LSR
(BAT)
10A
ECU-B
NO.1
(BAT)
20A
DL NO.2
Lock Relay
Unlock Relay
LSFL
UL2
L2
LSFR
RCTY
LCTY
FRCY
L1
UL1
FLCY
BCTY
KSW
DBKL
Lock Unlock Control Switch
Key Lock
Key Unlock
Door Lock Control Switch
Rear Door Courtesy Light Switch Assembly RH
Rear Door Courtesy Light Switch Assembly LH
Front Door Courtesy Light Switch Assembly RH
Rear Door Lock with Motor Assembly RH
Rear Door Lock with Motor Assembly LH
Front Door Lock with Motor Assembly LH
Front Door Lock with Motor Assembly RH
Rear Window Regulator Motor Switch Assembly
Front Door Courtesy Light Switch Assembly LH
Front Door Lock Control Switch
Rear Door Lock Assembly
Front Door Lock Assembly
Unlock Warning Switch
Key Unlock Warning Switch
Front Door Key Cylinder Lock Switch Assembly LH
Front Door Key Cylinder Lock Switch Assembly RH
G98
No. 11
Junction
Connector
G108
No. 20
Junction
Connector
G29
No. 5
Junction
Connector
G100
No. 14
Junction
Connector
G109
No. 6
Junction
Connector
G101
No. 9
Junction
Connector
G102
No. 10
Junction
Connector
G103
No. 13
Junction
Connector
G104
No. 32
Junction
Connector
G105
No. 29
Junction
Connector
* 8: w/ Stop & Start System
* 9: w/o Stop & Start System
*29: w/ Double Locking
*30: w/o Double Locking
*37: w/ Entry & Start System
*18: w/ Power Back Door
*19: w/o Power Back Door
*35: w/ Power Seat
*36: w/o Power Seat
*38: w/o Entry & Start System